A Additional figures and examples

A.1 Special cases of transductive regret.

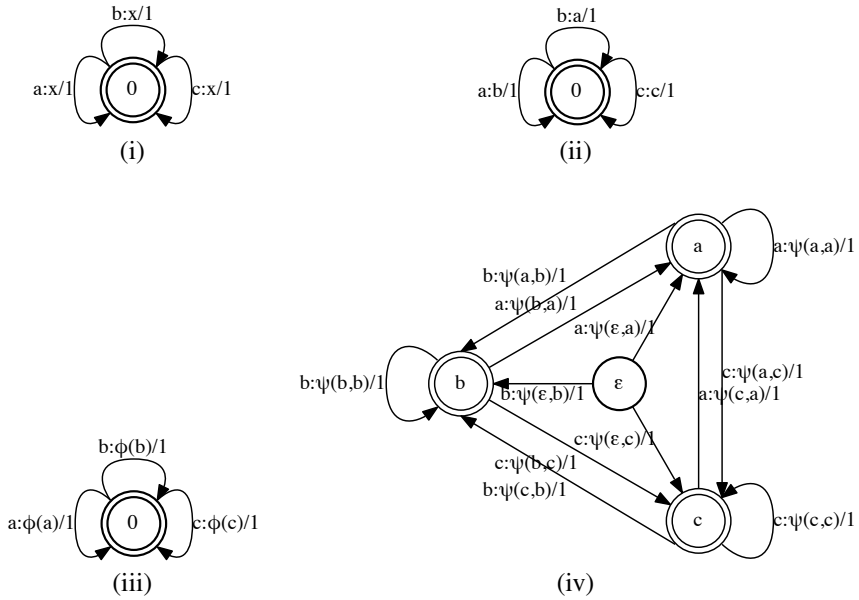

Figure 4: Several families of WFSTs for special cases of transductive regret for $\Sigma = \{a, b, c\}$. (i) External regret with parameter $x \in \Sigma$. (ii) Internal regret: family of transducers $\mathcal{T}_{a_1,a_2}$ with $a_1 \neq a_2$, $a_1, a_2 \in \Sigma$; example shown for $\mathcal{T}_{a,b}$. (iii) Swap regret with parameter $\varphi\colon \Sigma \to \Sigma$. (iv) Bigram conditional swap regret with parameter $\psi\colon (\Sigma \cup \{\epsilon\}) \times \Sigma \to \Sigma$.

A.2 Example with a swapping subset.

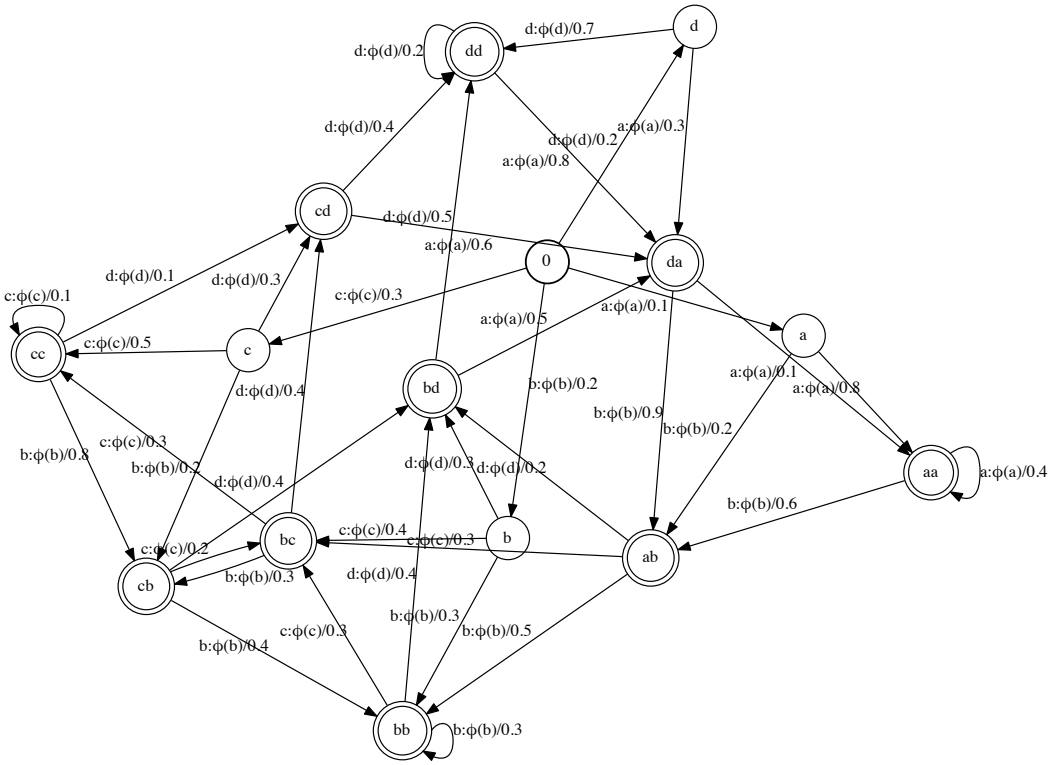

Figure 5: Example of a WFST with $\Sigma = \{a, b, c, d\}$ and where each state has a swapping subset.

B Pseudocode of FASTTRANSDUCE

Algorithm 3: FASTTRANSDUCE; $(\mathcal{A}_{u,i})_{u \in Q_{\mathcal{T}}, i \in \mathsf{ilab}[\mathsf{E}_{\mathcal{T}}[u]]}$ external regret minimization algorithms.

Algorithm: FASTTRANSDUCE($\mathcal{T}$, $(\mathcal{A}_{u,i})_{u \in Q_{\mathcal{T}}, i \in \mathsf{ilab}[\mathsf{E}_{\mathcal{T}}[u]]}$)

$u \leftarrow I_{\mathcal{T}}$
for $t \leftarrow 1$ **to** T **do**
  for each $i \in \mathsf{ilab}[\mathsf{E}_{\mathcal{T}}[u]]$ **do**
    $\mathsf{q}_i \leftarrow$ QUERY($\mathcal{A}_{u,i}$)
  $\mathbf{Q}^{t,u} \leftarrow [\mathsf{q}_1 1_{1 \in \mathsf{ilab}[\mathsf{E}_{\mathcal{T}}[u]]} \cdots \mathsf{q}_N 1_{N \in \mathsf{ilab}[\mathsf{E}_{\mathcal{T}}[u]]}]^\top$
  for each $j \leftarrow 1$ **to** N **do**
    $c_j \leftarrow \min_{i \in \mathsf{ilab}[\mathsf{E}_{\mathcal{T}}[u]]} \mathbf{Q}^{t,u}_{i,j} 1_{j \in \mathsf{ilab}[\mathsf{E}_{\mathcal{T}}[u]]}$
  $\alpha_t \leftarrow \|\mathbf{c}\|_1; \quad \tau_t \leftarrow \left\lceil \frac{\log\left(\frac{1}{\sqrt{t}}\right)}{\log(1-\alpha_t)} \right\rceil$
  if $\tau_t < N$ **then**
    $\mathsf{p}_t \leftarrow \mathsf{p}_t^0 \leftarrow \frac{\mathbf{c}}{\alpha_t}$
    for $\tau \leftarrow 1$ **to** τ_t **do**
      $(\mathsf{p}_t^\tau)^\top \leftarrow (\mathsf{p}_t^\tau)^\top (\mathbf{Q}^{t,u} - \vec{1}\mathbf{c}^\top)$; $\mathsf{p}_t \leftarrow \mathsf{p}_t + \mathsf{p}_t^\tau$
    $\mathsf{p}_t \leftarrow \frac{\mathsf{p}_t}{\|\mathsf{p}_t\|_1}$
  else
    $\mathsf{p}_t^\top = $ FIXED-POINT($\mathbf{Q}^{t,u}$)
  $x_t \leftarrow$ SAMPLE(p_t); $\quad \mathbf{l}_t \leftarrow$ RECEIVELOSS(); $\quad u \leftarrow \delta_{\mathcal{T}}(u, x_t)$
  for each $i \in \mathsf{ilab}[\mathsf{E}_{\mathcal{T}}[u]]$ **do**
    ATTRIBUTELOSS($\mathcal{A}_{u,i}$, $\mathsf{p}_t[i]\mathbf{l}_t$)

C Pseudocode of FastSleepTransduce

Algorithm 4: FastSleepTransduce. $(\mathcal{A}_{u,i})$ sleeping regret minimization algorithms.

Algorithm: FastSleepTransduce($\mathcal{T}$, $\{\mathcal{A}_{u,i}\}_{u \in Q_{\mathcal{T}}, i \in \mathsf{ilab}[\mathsf{E}_{\mathcal{T}}[u]]}$)

$u \leftarrow I_{\mathcal{T}}$
for $t \leftarrow 1$ **to** T **do**
  $A_t \leftarrow$ AwakeSet()
  for each $i \in \mathsf{ilab}[\mathsf{E}_{\mathcal{T}}[u]] \cap A_t$ **do**
    $\mathsf{q}_i \leftarrow$ Query($\mathcal{A}_{u,i}$); $\quad \mathsf{q}_i^{A_t} \leftarrow \frac{\mathsf{q}_i|_{A_t}}{\sum_{j \in A_t} \mathsf{q}_i}$
  $\mathbf{Q}^{t,u} \leftarrow [\mathsf{q}_1^{A_t} 1_{1 \in \mathsf{ilab}[\mathsf{E}_{\mathcal{T}}[u]] \cap A_t}; \ldots; \mathsf{q}_N^{A_t} 1_{N \in \mathsf{ilab}[\mathsf{E}_{\mathcal{T}}[u]] \cap A_t}]$
  for each $j \leftarrow 1$ **to** N **do**
    $c_j \leftarrow \min_{i \in \mathsf{ilab}[\mathsf{E}_{\mathcal{T}}[u]] \cap A_t} \mathbf{Q}_{i,j}^{t,u} 1_{j \in \mathsf{ilab}[\mathsf{E}_{\mathcal{T}}[u]] \cap A_t}$
  $\alpha_t \leftarrow \|\mathbf{c}\|_1; \quad \tau_t \leftarrow \left\lceil \frac{\log\left(\frac{1}{\sqrt{t}}\right)}{\log(1-\alpha_t)} \right\rceil$
  if $\tau_t < N$ **then**
    $\mathsf{p}_t \leftarrow \mathsf{p}_t^0 \leftarrow \frac{\mathbf{c}}{\alpha_t}$
    for $\tau \leftarrow 1$ **to** τ_t **do**
      $(\mathsf{p}_t^\tau)^\top \leftarrow (\mathsf{p}_t^\tau)^\top (\mathbf{Q}^{t,u} - [1_{1 \in A_t}; \ldots; 1_{|\mathsf{ilab}[\mathsf{E}_{\mathcal{T}}[q]]| \in A_t}] \mathbf{c}^\top)$
      $\mathsf{p}_t \leftarrow \mathsf{p}_t + \mathsf{p}_t^\tau$
    $\mathsf{p}_t \leftarrow \frac{\mathsf{p}_t}{\|\mathsf{p}_t\|_1}$
  else
    $\mathsf{p}_t^\top \leftarrow$ Fixed-Point($\mathbf{Q}^{t,u}$)
  $\mathsf{p}_t^{A_t} \leftarrow \frac{\mathsf{p}_t|_{A_t}}{\sum_{j \in A_t} \mathsf{p}_{t,j}}; \quad x_t \leftarrow$ Sample($\mathsf{p}_t^{A_t}$); $\quad \mathbf{l}_t \leftarrow$ ReceiveLoss(); $\quad u \leftarrow \delta_{\mathcal{T}}[u, x_t]$
  for each $i \in \mathsf{ilab}[\mathsf{E}_{\mathcal{T}}[u]]$ **do**
    AttributeLoss($\mathcal{A}_{u,i}$, $\mathsf{p}_t[i]\mathbf{l}_t$)

D Proof of Theorem 1

Theorem 1. *Let $\mathcal{A}_1, \dots, \mathcal{A}_N$ be external regret minimizing algorithms admitting data-dependent regret bounds of the form $O(\sqrt{L_T(\mathcal{A}_i)\log N})$, where $L_T(\mathcal{A}_i)$ is the cumulative loss of $\mathcal{A}_i$ after T rounds. Assume that, at each round, the sum of the minimal probabilities given to an expert by these algorithms is bounded below by some constant $\alpha > 0$. Then,* FastSwap *achieves a swap regret in $O(\sqrt{TN\log N})$ with a per-iteration complexity in $O\big(N^2 \min\big\{\frac{\log T}{\log(1/(1-\alpha))}, N\big\}\big)$.*

Proof. Let p_t be the distribution returned by FastSwap at round t. For any distribution p_t^*, $t \in [T]$, the following inequality holds:

$$\begin{aligned}
\sum_{t=1}^{T} \mathop{\mathbb{E}}_{x_t\sim\mathsf{p}_t}[l_t(x_t)]1_{\tau_t<N} &= \sum_{t=1}^{T} \mathop{\mathbb{E}}_{x_t\sim\mathsf{p}_t^*}[l_t(x_t)]1_{\tau_t<N} + \sum_{t=1}^{T} \mathop{\mathbb{E}}_{x_t\sim\mathsf{p}_t}[l_t(x_t)]1_{\tau_t<N} \\
&\quad - \sum_{t=1}^{T} \mathop{\mathbb{E}}_{x_t\sim\mathsf{p}_t^*}[l_t(x_t)]1_{\tau_t<N} \\
&\le \sum_{t=1}^{T} \mathop{\mathbb{E}}_{x_t\sim\mathsf{p}_t^*}[l_t(x_t)]1_{\tau_t<N} + \sum_{t=1}^{T} \|\mathsf{p}_t - \mathsf{p}_t^*\|_1 \|l_t\|_\infty 1_{\tau_t<N} \\
&\le \sum_{t=1}^{T} \mathop{\mathbb{E}}_{x_t\sim\mathsf{p}_t^*}[l_t(x_t)]1_{\tau_t<N} + \sum_{t=1}^{T} \|\mathsf{p}_t - \mathsf{p}_t^*\|_1 1_{\tau_t<N}.
\end{aligned}$$

Let p_t^* be the stationary distribution of the row stochastic matrix $\mathbf{Q}^t$, $\mathsf{p}_t^{*\top}\mathbf{Q}^t = \mathsf{p}_t^{*\top}$. Then, we can write

$$\begin{aligned}
\sum_{t=1}^{T} \mathop{\mathbb{E}}_{x_t\sim\mathsf{p}_t^*}[l_t(x_t)]1_{\tau_t<N} &= \sum_{t=1}^{T}\sum_{j=1}^{N} \mathsf{p}_{t,j}^* l_{t,j} 1_{\tau_t<N} \\
&= \sum_{t=1}^{T}\sum_{i=1}^{N}\sum_{j=1}^{N} \mathsf{p}_{t,i}^* \mathbf{Q}_{i,j}^t l_{t,j} 1_{\tau_t<N} \\
&= \sum_{i=1}^{N}\sum_{t=1}^{T}\sum_{j=1}^{N} \mathbf{Q}_{i,j}^t \mathsf{p}_{t,i} l_{t,j} 1_{\tau_t<N} + \sum_{i=1}^{N}\sum_{t=1}^{T}\sum_{j=1}^{N} \mathbf{Q}_{i,j}^t (\mathsf{p}_{t,i}^* \\
&\quad - \mathsf{p}_{t,i}) l_{t,j} 1_{\tau_t<N} \\
&\le \sum_{i=1}^{N}\sum_{t=1}^{T}\sum_{j=1}^{N} \mathbf{Q}_{i,j}^t \mathsf{p}_{t,i} l_{t,j} 1_{\tau_t<N} + \sum_{t=1}^{T} \|\mathsf{p}_t^* - \mathsf{p}_t\|_1 1_{\tau_t<N}.
\end{aligned}$$

On the other hand, by design, if $\tau_t \ge N$, then $\mathsf{p}_t = \mathsf{p}_t^*$, so that

$$\sum_{t=1}^{T} \mathop{\mathbb{E}}_{x_t\sim\mathsf{p}_t}[l_t(x_t)]1_{\tau_t\ge N} = \sum_{i=1}^{N}\sum_{t=1}^{T}\sum_{j=1}^{N} \mathbf{Q}_{i,j}^t \mathsf{p}_{t,i} l_{t,j} 1_{\tau_t\ge N}.$$

Thus, it follows that

$$\begin{aligned}
\sum_{t=1}^{T} \mathop{\mathbb{E}}_{x_t\sim\mathsf{p}_t}[l_t(x_t)] &\le \sum_{i=1}^{N}\sum_{t=1}^{T}\sum_{j=1}^{N} \mathbf{Q}_{i,j}^t \mathsf{p}_{t,i} l_{t,j} + 2\sum_{t=1}^{T} \|\mathsf{p}_t^* - \mathsf{p}_t\|_1 1_{\tau_t<N} \\
&\le \sum_{i=1}^{N} \left[\min_{j\in[N]} \sum_{t=1}^{T} \mathsf{p}_{t,i} l_{t,j} + \mathrm{Reg}_T(\mathcal{A}_i, \Phi_{\text{ext}})\right] + 2\sum_{t=1}^{T} \|\mathsf{p}_t^* - \mathsf{p}_t\|_1 1_{\tau_t<N} \\
&= \min_{\varphi\in\Phi_{\text{swap}}} \sum_{i=1}^{N} \left[\sum_{t=1}^{T} \mathsf{p}_{t,i} l_{t,\varphi(i)} + \mathrm{Reg}_T(\mathcal{A}_i, \Phi_{\text{ext}})\right] + 2\sum_{t=1}^{T} \|\mathsf{p}_t^* - \mathsf{p}_t\|_1 1_{\tau_t<N}.
\end{aligned}$$

Now let $L_T(\mathcal{A}_i)$ denote the cumulative loss incurred by algorithm $\mathcal{A}_i$. Since the losses attributed to algorithm $\mathcal{A}_i$ are scaled by $\mathsf{p}_{t,i}$, at each round, the sum of the losses over all the algorithms is at most 1. Thus, by Jensen's inequality, the following inequalities hold:

$$\frac{1}{N}\sum_{i=1}^{N}\mathrm{Reg}_T(\mathcal{A}_i,\Phi_{\text{ext}}) = \frac{1}{N}\sum_{i=1}^{N} O\big(\sqrt{L_T(\mathcal{A}_i)\log N}\big)$$
$$\leq O\left(\sqrt{\frac{1}{N}\sum_{i=1}^{N} L_T(\mathcal{A}_i)\log N}\right) \leq O\left(\sqrt{\frac{T\log N}{N}}\right),$$

which implies $\sum_{i=1}^{N}\mathrm{Reg}_T(\mathcal{A}_i,\Phi_{\text{ext}}) \leq \sqrt{TN\log N}$.

Finally, during the rounds in which $1_{\tau_t<N}$, p_t is an RPM approximation of p_t^* using τ_t iterations. Thus, by Equation 3.7 in [Nesterov and Nemirovski, 2015] the following inequality holds: $\|\mathsf{p}_t - \mathsf{p}_t^*\|_1 \leq (1-\alpha_t)^{\tau_t}$. Since τ_t is chosen so that the inequality $(1-\alpha_t)^{\tau_t} \leq 1/\sqrt{t}$ holds, it follows that $\sum_{t=1}^{T}\|\mathsf{p}_t - \mathsf{p}_t^*\|1_{\tau_t<N} \leq \sum_{t=1}^{T} 1/\sqrt{t} \leq \sqrt{T}$, which proves the regret bound $\mathrm{Reg}_T(\mathcal{A},\Phi_{\text{swap}}) \leq O(\sqrt{TN\log N})$.

Furthermore, the computational cost of the t-th iteration of the algorithm is dominated by τ_t matrix multiplications or the solution of the linear system. τ_t can be bounded as follows: $\tau_t = \left\lceil \frac{\log\left(\frac{1}{\sqrt{t}}\right)}{\log(1-\alpha_t)} \right\rceil \leq \frac{\log\left(\frac{1}{\sqrt{t}}\right)}{\log(1-\alpha)} + 1$. Thus, the computational cost of the t-th iteration is in

$$O\left(N^2 \min\left\{\frac{\log t}{\log(1/(1-\alpha_t))}, N\right\}\right) \leq O\left(N^2 \min\left\{\frac{\log T}{\log(1/(1-\alpha))}, N\right\}\right).$$

□

E Proof of Theorem 2

Theorem 2. *Let $(\mathcal{A}_{u,i})_{u\in Q, i\in \mathsf{ilab}[\mathsf{E}_{\mathcal{T}}[u]]}$ be external regret minimizing algorithms admitting data-dependent regret bounds of the form $O(\sqrt{L_T(\mathcal{A}_{u,i})\log N})$, where $L_T(\mathcal{A}_{u,i})$ is the cumulative loss of $\mathcal{A}_{u,i}$ after T rounds. Assume that, at each round, the sum of the minimal probabilities given to an expert by these algorithms is bounded below by some constant $\alpha > 0$. Then,* FastTransduce *achieves a transductive regret against $\mathcal{T}$ that is in $O(\sqrt{T|\mathsf{E}_{\mathcal{T}}|_{\mathsf{in}}\log N})$ with a per-iteration complexity in $O\Big(N^2 \min\Big\{\frac{\log T}{\log(1/(1-\alpha))}, N\Big\}\Big)$.*

Proof. Let p_t be the distribution output by FastTransduce at round t. For any distribution p^*_t, $t \in [T]$, the following inequalities hold:

$$\begin{aligned}
\sum_{t=1}^{T} \mathop{\mathbb{E}}_{x_t\sim \mathsf{p}_t}[l_t(x_t)]1_{\tau_t<N} &= \sum_{t=1}^{T} \mathop{\mathbb{E}}_{x_t\sim \mathsf{p}^*_t}[l_t(x_t)]1_{\tau_t<N} + \sum_{t=1}^{T} \mathop{\mathbb{E}}_{x_t\sim \mathsf{p}_t}[l_t(x_t)]1_{\tau_t<N} \\
&\quad - \sum_{t=1}^{T} \mathop{\mathbb{E}}_{x_t\sim \mathsf{p}^*_t}[l_t(x_t)]1_{\tau_t<N} \\
&\le \sum_{t=1}^{T} \mathop{\mathbb{E}}_{x_t\sim \mathsf{p}^*_t}[l_t(x_t)]1_{\tau_t<N} + \sum_{t=1}^{T} \|\mathsf{p}_t - \mathsf{p}^*_t\|_1 \|l_t\|_\infty 1_{\tau_t<N} \\
&\le \sum_{t=1}^{T} \mathop{\mathbb{E}}_{x_t\sim \mathsf{p}^*_t}[l_t(x_t)]1_{\tau_t<N} + \sum_{t=1}^{T} \|\mathsf{p}_t - \mathsf{p}^*_t\|_1 1_{\tau_t<N}.
\end{aligned}$$

Let u_t be the state that the algorithm is in at time t as a result of its past actions. Consider the matrix $\mathbf{Q}^{t,u_t}$ defined in the algorithm. The restriction of the matrix $\mathbf{Q}^{t,u_t}$ to its non-zero rows and columns is a row stochastic matrix. Let p^*_t be its stationary distribution, and by augmenting it with zeros in the zero rows of $\mathbf{Q}^{t,u_t}$, we may take $\mathsf{p}^*_t \in \Delta_N$ as a fixed point of $\mathbf{Q}^{t,u_t}$. Then, we can write:

$$\begin{aligned}
\sum_{t=1}^{T} \mathop{\mathbb{E}}_{x_t\sim \mathsf{p}^*_t}[l_t(x_t)]1_{\tau_t<N} &= \sum_{t=1}^{T}\sum_{i=1}^{N}\sum_{j=1}^{N} \mathsf{p}^*_{t,i}\mathbf{Q}^{t,u_t}_{i,j} l_{t,j} 1_{\tau_t<N} \\
&= \sum_{i=1}^{N}\sum_{t=1}^{T}\sum_{j=1}^{N} \mathbf{Q}^{t,u_t}_{i,j} \mathsf{p}_{t,i} l_{t,j} 1_{\tau_t<N} \\
&\quad + \sum_{i=1}^{N}\sum_{t=1}^{T}\sum_{j=1}^{N} \mathbf{Q}^{t,u_t}_{i,j} (\mathsf{p}^*_{t,i} - \mathsf{p}_{t,i}) l_{t,j} 1_{\tau_t<N} \\
&\le \sum_{i=1}^{N}\sum_{t=1}^{T}\sum_{j=1}^{N} \mathbf{Q}^{t,u_t}_{i,j} \mathsf{p}_{t,i} l_{t,j} 1_{\tau_t<N} + \sum_{t=1}^{T} \|\mathsf{p}^*_t - \mathsf{p}_t\|_1 1_{\tau_t<N}.
\end{aligned}$$

On the other hand, by design, if $\tau_t \ge N$, then $\mathsf{p}_t = \mathsf{p}^*_t$, so that

$$\sum_{t=1}^{T} \mathop{\mathbb{E}}_{x_t\sim \mathsf{p}_t}[l_t(x_t)]1_{\tau_t\ge N} = \sum_{i=1}^{N}\sum_{t=1}^{T}\sum_{j=1}^{N} \mathbf{Q}^{t,u_t}_{i,j} \mathsf{p}_{t,i} l_{t,j} 1_{\tau_t\ge N}.$$

Thus, it follows that for any WFST $\mathcal{T} \in \mathcal{T}$,

$$\begin{aligned}
\sum_{t=1}^{T} \mathop{\mathbb{E}}_{x_t\sim \mathsf{p}_t}[l_t(x_t)] &\le \sum_{i=1}^{N}\sum_{t=1}^{T}\sum_{j=1}^{N}\sum_{u\in Q_{\mathcal{T}}} \mathbf{Q}^{t,u}_{i,j} 1_{\delta_{\mathcal{T}}(I_{\mathcal{T}}, x_{1:t-1})=u} \mathsf{p}_{t,i} l_{t,j} + 2\sum_{t=1}^{T} \|\mathsf{p}^*_t - \mathsf{p}_t\|_1 1_{\tau_t<N} \\
&= \sum_{u\in Q_{\mathcal{T}}} \sum_{i\in \mathsf{ilab}[\mathsf{E}_{\mathcal{T}}[u]]} \sum_{t=1}^{T}\sum_{j=1}^{N} \mathbf{Q}^{t,u}_{i,j} 1_{\delta_{\mathcal{T}}(I_{\mathcal{T}}, x_{1:t-1})=u} \mathsf{p}_{t,i} l_{t,j}
\end{aligned}$$

$$
\begin{aligned}
&+ 2\sum_{t=1}^{T} \|\mathsf{p}_t^* - \mathsf{p}_t\|_1 1_{\tau_t < N} \\
&\leq \sum_{u \in Q_{\mathcal{T}}} \sum_{i \in \mathsf{ilab}[\mathsf{E}_{\mathcal{T}}[u]]} \min_{i^* \in \mathsf{olab}[\mathsf{E}_{\mathcal{T}}[\delta_{\mathcal{T}}(I_{\mathcal{T}}, x_{1:t-1}), x_t]]} \sum_{t=1}^{T} 1_{\delta_{\mathcal{T}}(I_{\mathcal{T}}, x_{1:t-1}) = u} \mathsf{p}_{t,i} l_{t,i^*} \\
&\quad + 2\sum_{t=1}^{T} \|\mathsf{p}_t^* - \mathsf{p}_t\|_1 1_{\tau_t < N} + \sum_{i=1}^{N} \sum_{u \in Q_{\mathcal{T}}} \mathrm{Reg}_T(\mathcal{A}_{u,i}, \Phi_{\text{ext}}) \\
&\leq \sum_{u \in Q_{\mathcal{T}}} \sum_{i \in \mathsf{ilab}[\mathsf{E}_{\mathcal{T}}[q]]} \sum_{e \in \mathsf{E}_{\mathcal{T}}[\delta_{\mathcal{T}}(I_{\mathcal{T}}, x_{1:t-1}), x_t]} \sum_{t=1}^{T} 1_{\delta_{\mathcal{T}}(I_{\mathcal{T}}, x_{1:t-1}) = u} \mathsf{p}_{t,i} w[e] l_t(\mathsf{olab}[e]) \\
&\quad + 2\sum_{t=1}^{T} \|\mathsf{p}_t^* - \mathsf{p}_t\|_1 1_{\tau_t < N} + \sum_{u \in Q_{\mathcal{T}}} \sum_{i \in \mathsf{ilab}[\mathsf{E}_{\mathcal{T}}[q]]} \mathrm{Reg}_T(\mathcal{A}_{u,i}, \Phi_{\text{ext}}) \\
&= \sum_{t=1}^{T} \mathop{\mathbb{E}}_{x_t \sim \mathsf{p}_t} \left[\sum_{e \in \mathsf{E}_{\mathcal{T}}[\delta_{\mathcal{T}}(I_{\mathcal{T}}, x_{1:t-1}), x_t]} w[e] l_t(\mathsf{olab}[e]) \right] + 2\sum_{t=1}^{T} \|\mathsf{p}_t^* - \mathsf{p}_t\|_1 1_{\tau_t < N} \\
&\quad + \sum_{u \in Q_{\mathcal{T}}} \sum_{i \in \mathsf{ilab}[\mathsf{E}_{\mathcal{T}}[q]]} \mathrm{Reg}_T(\mathcal{A}_{u,i}, \Phi_{\text{ext}}).
\end{aligned}
$$

Now let $L_T(\mathcal{A}_{u,i})$ denote the cumulative loss incurred by algorithm $\mathcal{A}_{u,i}$. Since the losses attributed to algorithm $\mathcal{A}_{u,i}$ are scaled by $1_{\delta_{\mathcal{T}}(I_{\mathcal{T}}, x_{1:t-1}) = u} \mathsf{p}_{t,i}$, it follows that at each round, the sum of the losses over all the algorithms is at most 1. Thus, by Jensen's inequality, it follows that

$$
\begin{aligned}
&\frac{1}{\sum_{u \in Q_{\mathcal{T}}} |\mathsf{ilab}[\mathsf{E}_{\mathcal{T}}[u]]|} \sum_{u \in Q_{\mathcal{T}}} \sum_{i \in \mathsf{ilab}[\mathsf{E}_{\mathcal{T}}[u]]} \mathrm{Reg}_T(\mathcal{A}_{u,i}, \Phi_{\text{ext}}) \\
&= \frac{1}{\sum_{u \in Q_{\mathcal{T}}} |\mathsf{ilab}[\mathsf{E}_{\mathcal{T}}[u]]|} \sum_{u \in Q_{\mathcal{T}}} \sum_{i \in \mathsf{ilab}[\mathsf{E}_{\mathcal{T}}[u]]} \sqrt{L_T(\mathcal{A}_{u,i}) \log(N)} \\
&\leq \sqrt{\frac{1}{\sum_{u \in Q_{\mathcal{T}}} |\mathsf{ilab}[\mathsf{E}_{\mathcal{T}}[u]]|} \sum_{u \in Q_{\mathcal{T}}} \sum_{i \in \mathsf{ilab}[\mathsf{E}_{\mathcal{T}}[u]]} L_T(\mathcal{A}_{u,i}) \log(N)} \\
&\leq \sqrt{\frac{1}{\sum_{u \in Q_{\mathcal{T}}} |\mathsf{ilab}[\mathsf{E}_{\mathcal{T}}[u]]|} T \log(N)},
\end{aligned}
$$

so that $\sum_{u \in Q_{\mathcal{T}}} \sum_{i \in \mathsf{ilab}[\mathsf{E}_{\mathcal{T}}[u]]} \mathrm{Reg}_T(\mathcal{A}_{u,i}, \Phi_{\text{ext}}) \leq \sqrt{T \sum_{u \in Q_{\mathcal{T}}} |\mathsf{ilab}[\mathsf{E}_{\mathcal{T}}[u]]| \log(N)}$.

Finally, during the rounds in which $1_{\tau_t < N}$, p_t is an RPM approximation of p_t^* using τ_t iterations. Thus, it follows from Equation 3.7 in [Nesterov and Nemirovski, 2015] that $\|\mathsf{p}_t - \mathsf{p}_t^*\|_1 \leq (1 - \alpha_t)^{\tau_t}$. By the algorithm's choice of τ_t, $\|\mathsf{p}_t - \mathsf{p}_t^*\|_1 \leq \frac{1}{\sqrt{t}}$. Thus, it follows that $\sum_{t=1}^{T} \|\mathsf{p}_t - \mathsf{p}_t^*\|_1 1_{\tau_t < N} \leq \sqrt{T}$, so that $\mathrm{Reg}_T(\mathcal{A}, \mathcal{T}) \leq O(\sqrt{T \sum_{u \in Q_{\mathcal{T}}} |\mathsf{ilab}[\mathsf{E}_{\mathcal{T}}[q]]| \log(N)})$.

Moreover, the computational cost of the t-th iteration of the algorithm is dominated by τ_t matrix multiplications or the solution of the linear system. τ_t can be bounded as follows: $\tau_t = \left\lceil \frac{\log\left(\frac{1}{\sqrt{t}}\right)}{\log(1-\alpha_t)} \right\rceil \leq \frac{\log\left(\frac{1}{\sqrt{t}}\right)}{\log(1-\alpha)} + 1$. Thus, the computational cost of the t-th iteration is in

$$
O\left(N^2 \min\left\{\frac{\log t}{\log(1/(1-\alpha_t))}, N\right\}\right) \leq O\left(N^2 \min\left\{\frac{\log T}{\log(1/(1-\alpha))}, N\right\}\right).
$$

□

F Proof of Theorem 3

Theorem 3. *Let $(\mathcal{A}_{I,u,i})_{I\in\mathcal{I},u\in Q_{\mathcal{T}},i\in\mathsf{ilab}[\mathsf{E}_{\mathcal{T}}[q]]}$ be external regret minimizing algorithms admitting data-dependent regret bounds of the form $O(\sqrt{L_T(\mathcal{A}_{I,u,i})\log N})$, where $L_T(\mathcal{A}_{I,u,i})$ is the cumulative loss of $\mathcal{A}_{I,u,i}$ after T rounds. Let $\mathcal{A}_{\mathcal{I}}$ be an external regret minimizing algorithm over $\mathcal{I}$ that admits a regret in $O(\sqrt{T\log(|\mathcal{I}|)})$ after T rounds. Assume further that at each round, the sum of the minimal probabilities given to an expert by these algorithms is bounded below by some constant $\alpha > 0$. Then,* FastTimeSelectTransduce *achieves a time-selection transductive regret with respect to the time-selection family $\mathcal{I}$ and WFST family $\mathcal{T}$ that is in $O\Big(\sqrt{T\left(\log(|\mathcal{I}|)+|\mathsf{E}_{\mathcal{T}}|_{\mathsf{in}}\log N\right)}\Big)$ with a per-iteration complexity in $O\Big(N^2\Big(\min\Big\{\frac{\log(T)}{\log((1-\alpha)^{-1})},N\Big\}+|\mathcal{I}|\Big)\Big)$.*

Proof. We first note that since $\mathcal{A}_{\mathcal{I}}$ is designed to minimize external regret against the losses $(\tilde{\mathbf{l}}^t)_{t=1}^T$, it follows that for any $I^*\in\mathcal{I}$,

$$\sum_{t=1}^T\sum_{I\in\mathcal{I}}\tilde{\mathsf{q}}_I^t\tilde{l}_I^t\le\sum_{t=1}^T\tilde{l}_{I^*}^t+\mathrm{Reg}_T(\mathcal{A}_{\mathcal{I}}).$$

Let u_t be the state that the algorithm is in at time t as a result of its past actions. Consider the matrix $\mathbf{Q}^{t,u_t}$ defined in the algorithm. The restriction of the matrix $\mathbf{Q}^{t,u_t}$ to its non-zero rows and columns is a row stochastic matrix. Let p_t^* be its stationary distribution, and by augmenting it with zeros in the zero rows of $\mathbf{Q}^{t,u_t}$, we may take $\mathsf{p}_t^*\in\Delta_N$ as a fixed point of of $\mathbf{Q}^{t,u_t}$. Then, by expanding the definition of $\tilde{\mathbf{l}}^t$, we can rewrite the expression on the left-hand side as

$$\begin{aligned}\sum_{t=1}^T\sum_{I\in\mathcal{I}}\tilde{\mathsf{q}}_I^t\tilde{l}_I^t1_{\tau_t<N}&=\sum_{t=1}^T\sum_{I\in\mathcal{I}}\tilde{\mathsf{q}}_I^tI(t)\left(\mathsf{p}_t^\top\mathbf{M}^{t,u_t,I}\mathbf{l}_t-\mathsf{p}_t^\top\mathbf{l}_t\right)1_{\tau_t<N}\\&=\sum_{t=1}^T\sum_{I\in\mathcal{I}}\tilde{\mathsf{q}}_I^tI(t)\mathsf{p}_t^\top\mathbf{M}^{t,u_t,I}\mathbf{l}_t1_{\tau_t<N}-\sum_{t=1}^T\sum_{I\in\mathcal{I}}\tilde{\mathsf{q}}_I^tI(t)\mathsf{p}_t^\top\mathbf{l}_t1_{\tau_t<N}\\&\ge\sum_{t=1}^T\sum_{I\in\mathcal{I}}\tilde{\mathsf{q}}_I^tI(t)(\mathsf{p}_t^*)^\top\mathbf{M}^{t,u_t,I}\mathbf{l}_t1_{\tau_t<N}-\sum_{t=1}^T\sum_{I\in\mathcal{I}}\tilde{\mathsf{q}}_I^tI(t)(\mathsf{p}_t^*)^\top\mathbf{l}_t1_{\tau_t<N}\\&\quad-\sum_{t=1}^T\|\mathsf{p}_t-\mathsf{p}_t^*\|_11_{\tau_t<N}.\end{aligned}$$

On the other hand, by design, if $\tau_t\ge N$, then $\mathsf{p}_t=\mathsf{p}_t^*$, so that

$$\sum_{t=1}^T\sum_{I\in\mathcal{I}}\tilde{\mathsf{q}}_I^t\tilde{l}_I^t1_{\tau_t\ge N}=\sum_{t=1}^T\sum_{I\in\mathcal{I}}\tilde{\mathsf{q}}_I^tI(t)(\mathsf{p}_t^*)^\top\mathbf{M}^{t,u_t,I}\mathbf{l}_t1_{\tau_t\ge N}-\sum_{t=1}^T\sum_{I\in\mathcal{I}}\tilde{\mathsf{q}}_I^tI(t)(\mathsf{p}_t^*)^\top\mathbf{l}_t1_{\tau_t\ge N}.$$

Thus, it follows that

$$\sum_{t=1}^T\sum_{I\in\mathcal{I}}\tilde{\mathsf{q}}_I^t\tilde{l}_I^t\ge\sum_{t=1}^T\sum_{I\in\mathcal{I}}\tilde{\mathsf{q}}_I^tI(t)(\mathsf{p}_t^*)^\top\mathbf{M}^{t,u_t,I}\mathbf{l}_t-\sum_{t=0}^T\sum_{I\in\mathcal{I}}\tilde{\mathsf{q}}_I^tI(t)(\mathsf{p}_t^*)^\top\mathbf{l}_t-\sum_{t=1}^T\|\mathsf{p}_t-\mathsf{p}_t^*\|_11_{\tau_t<N}.$$

If $\sum_{I\in\mathcal{I}}I(t)\tilde{\mathsf{q}}_I^t\neq0$, then the fact that p_t^* is a stationary distribution of $\mathbf{Q}^t=\frac{\sum_{I\in\mathcal{I}}I(t)\tilde{\mathsf{q}}_I^t\mathbf{M}^{t,u_t,I}}{\sum_{I\in\mathcal{I}}I(t)\tilde{\mathsf{q}}_I^t}$ implies that

$$\sum_{I\in\mathcal{I}}\tilde{\mathsf{q}}_I^tI(t)(\mathsf{p}_t^*)^\top\mathbf{M}^{t,u_t,I}\mathbf{l}_t=\sum_{I\in\mathcal{I}}\tilde{\mathsf{q}}_I^tI(t)(\mathsf{p}_t^*)^\top\mathbf{l}_t.$$

On the other hand, if $\sum_{I\in\mathcal{I}}I(t)\tilde{\mathsf{q}}_I^t=0$, then by non-negativity, it must be the case that $I(t)\tilde{\mathsf{q}}_I^t=0$ for every $I\in\mathcal{I}$. Thus, it follows that

$$\sum_{I\in\mathcal{I}}\tilde{\mathsf{q}}_I^tI(t)(\mathsf{p}_t^*)^\top\mathbf{M}^{t,u_t,I}\mathbf{l}_t=\sum_{I\in\mathcal{I}}\tilde{\mathsf{q}}_I^tI(t)(\mathsf{p}_t^*)^\top\mathbf{l}_t=0,$$

which implies that

$$\sum_{t=1}^{T} -\tilde{l}_{I^*}^t \leq \sum_{t=1}^{T} \|\mathsf{p}_t - \mathsf{p}_t^*\|_1 1_{\tau_t < N} + \mathrm{Reg}_T(\mathcal{A}_{\mathcal{I}}).$$

By expanding the definition of $\tilde{l}_{I^*}^t$, we can write

$$\sum_{t=1}^{T} -\tilde{l}_{I^*}^t = \sum_{t=1}^{T} -I^*(t)\left(\mathsf{p}_t^\top \mathbf{M}^{t,u_t,I^*}\mathbf{l}_t - \mathsf{p}_t^\top \mathbf{l}_t\right) = \sum_{t=1}^{T} I^*(t)\mathsf{p}_t^\top \mathbf{l}_t - I^*(t)\mathsf{p}_t^\top \mathbf{M}^{t,u_t,I^*}\mathbf{l}_t.$$

Moreover, for any $\mathcal{T} \in \mathcal{T}$, we can bound the second term in the following way:

$$\begin{aligned}
\sum_{t=1}^{T} I^*(t)\mathsf{p}_t^\top \mathbf{M}^{t,u_t,I^*}\mathbf{l}_t &= \sum_{t=1}^{T} I^*(t) \sum_{i=1}^{N} \mathsf{p}_{t,i} \sum_{j=1}^{N} \mathbf{M}_{i,j}^{t,u_t,I^*} l_{t,j} \\
&= \sum_{u \in Q_{\mathcal{T}}} \sum_{i=1}^{N} \sum_{t=1}^{T} \sum_{j=1}^{N} \mathbf{M}_{i,j}^{t,u_t,I^*} 1_{\delta_{\mathcal{T}}(I_{\mathcal{T}}, x_{1:t-1}) = u} I^*(t)\mathsf{p}_{t,i} l_{t,j} \\
&= \sum_{u \in Q_{\mathcal{T}}} \sum_{i \in \mathsf{ilab}[\mathsf{E}_{\mathcal{T}}[u]]} \sum_{t=1}^{T} \sum_{j=1}^{N} \mathbf{M}_{i,j}^{t,u_t,I^*} 1_{\delta_{\mathcal{T}}(I_{\mathcal{T}}, x_{1:t-1}) = u} I^*(t)\mathsf{p}_{t,i} l_{t,j} \\
&\leq \sum_{u \in Q_{\mathcal{T}}} \sum_{i \in \mathsf{ilab}[\mathsf{E}_{\mathcal{T}}[u]]} \min_{i^* \in \mathsf{olab}[\mathsf{E}_{\mathcal{T}}[u]]} \sum_{t=1}^{T} 1_{\delta_{\mathcal{T}}(I_{\mathcal{T}}, x_{1:t-1}) = u} I^*(t)\mathsf{p}_{t,i} l_{t,i^*} \\
&\quad + \sum_{u \in Q_{\mathcal{T}}} \sum_{i \in \mathsf{ilab}[\mathsf{E}_{\mathcal{T}}[u]]} \mathrm{Reg}_T(\mathcal{A}_{I,u,i}, \Phi_{\text{ext}}) \\
&\leq \sum_{u \in Q_{\mathcal{T}}} \sum_{i \in \mathsf{ilab}[\mathsf{E}_{\mathcal{T}}[u]]} \sum_{e \in \mathsf{E}_{\mathcal{T}}[u]} w[e] \sum_{t=1}^{T} 1_{\delta_{\mathcal{T}}(I_{\mathcal{T}}, x_{1:t-1}) = u} I^*(t)\mathsf{p}_{t,i} l_{t,\mathsf{olab}[e]} \\
&\quad + \sum_{u \in Q_{\mathcal{T}}} \sum_{i \in \mathsf{ilab}[\mathsf{E}_{\mathcal{T}}[u]]} \mathrm{Reg}_T(\mathcal{A}_{I,u,i}, \Phi_{\text{ext}}) \\
&= \sum_{t=1}^{T} I^*(t) \mathop{\mathbb{E}}_{x_t \sim \mathsf{p}_t} \left[\sum_{e \in \mathsf{E}_{\mathcal{T}}[\delta_{\mathcal{T}}(I_{\mathcal{T}}, x_{1:t-1}), x_t]} w[e] l_t(\mathsf{olab}[e]) \right] \\
&\quad + \sum_{u \in Q_{\mathcal{T}}} \sum_{i \in \mathsf{ilab}[\mathsf{E}_{\mathcal{T}}[u]]} \mathrm{Reg}_T(\mathcal{A}_{I,u,i}, \Phi_{\text{ext}}),
\end{aligned}$$

using the fact that algorithm $\mathcal{A}_{I,u,i}$ minimizes external regret against the surrogate losses $I(t)1_{\delta_{\mathcal{T}}(I_\Phi, x_{1:t-1}) = u}\mathsf{p}_{t,i}\mathbf{l}_t$.

As in Theorem 2, the scaling assumption on the external regret minimizing algorithms and Jensen's inequality imply that

$$\sum_{u \in Q_{\mathcal{T}}} \sum_{i \in \mathsf{ilab}[\mathsf{E}_{\mathcal{T}}[u]]} \mathrm{Reg}_T(\mathcal{A}_{I,u,i}, \Phi_{\text{ext}}) \leq O\left(\sqrt{T \sum_{u \in Q_{\mathcal{T}}} |\mathsf{ilab}[\mathsf{E}_{\mathcal{T}}[u]]| \log(N)}\right).$$

Thus, we can write for any $I^* \in \mathcal{I}$ that

$$\begin{aligned}
&\sum_{t=1}^{T} I^*(t)\mathsf{p}_t^\top \mathbf{l}_t - I^*(t)\mathsf{p}_t^\top \mathbf{M}^{t,u_t,I^*}\mathbf{l}_t - \sum_{t=1}^{T} I^*(t) \mathop{\mathbb{E}}_{x_t \sim \mathsf{p}_t} \left[\sum_{e \in \mathsf{E}_{\mathcal{T}}[\delta_{\mathcal{T}}(I_{\mathcal{T}}, x_{1:t-1}), x_t]} w[e] l_t(\mathsf{olab}[e]) \right] \\
&\leq \mathrm{Reg}_T(\mathcal{A}_{\mathcal{I}}) + O\left(\sqrt{T \sum_{u \in Q_{\mathcal{T}}} |\mathsf{ilab}[\mathsf{E}_{\mathcal{T}}[u]]| \log(N)}\right) + \sum_{t=1}^{T} \|\mathsf{p}_t - \mathsf{p}_t^*\|_1 1_{\tau_t < N},
\end{aligned}$$

and as in Theorem 2, we can bound the l_1 approximation error of p_t for p_t^* by

$$\|\mathsf{p}_t - \mathsf{p}_t^*\|_1 \leq (1-\alpha_t)^{\tau_t} \leq \frac{1}{\sqrt{t}},$$

by the algorithm's choice of τ_t. Thus, by applying regret guarantee of algorithm $\mathcal{A}_{\mathcal{I}}$ together with the above calculations, the time-selection transductive regret of FASTTIMESELECTTRANSDUCE is in $O\left(\sqrt{T\left(\log(|\mathcal{I}|) + \sum_{q \in Q_\Phi} |\mathsf{ilab}[\mathsf{E}_{\mathcal{T}}[q]]| \log(N)\right)}\right)$.

Moreover, at each round t, the computational cost of the algorithm is dominated by two quantities: the update of $|\mathcal{I}|N$ external regret minimizing algorithms over the N experts, which is in $O(|\mathcal{I}|N^2)$, and the fixed-point approximation or solution of the linear system, which is in

$$O\left(N^2 \min\left\{\frac{\log(t)}{\log\left((1-\alpha_t)^{-1}\right)}, N\right\}\right) \leq O\left(N^2 \min\left\{\frac{\log(T)}{\log\left((1-\alpha)^{-1}\right)}, N\right\}\right).$$

□

G Proof of Theorem 4

Theorem 4. *Assume that the sleeping regret minimizing algorithms used as inputs of* FastSleepTransduce *achieve data-dependent regret bounds such that, if the algorithm selects the distributions* $(\mathsf{p}_t)_{t=1}^T$ *and observes losses* $(\mathbf{l}_t)_{t=1}^T$ *with awake sets* $(A_t)_{t=1}^T$*, then the regret of* $\mathcal{A}_i^q$ *is at most* $O\left(\sqrt{\sum_{t=1}^T \mathsf{u}^*(A_t)\,\mathbb{E}_{x_t\sim\mathsf{p}_t}[l_t(x_t)]\log(N)}\right)$*. Assume further that at each round, the sum of the minimal probabilities given to an expert by these algorithms is bounded below by some constant* $\alpha > 0$*. Then, the sleeping regret* $\mathrm{Reg}_T(\text{FastSleepTransduce}, \mathcal{T}, A_1^T)$ *of* FastSleepTransduce *is upper bounded by* $O\left(\sqrt{\sum_{t=1}^T \mathsf{u}(A_t)|\mathsf{E}_{\mathcal{T}}|_{\mathsf{in}}\log(N)}\right)$*. Moreover,* FastSleepTransduce *admits a per-iteration complexity in* $O\left(N^2 \min\left\{\frac{\log T}{\log(1/(1-\alpha))}, N\right\}\right)$.

Proof. Let $\mathsf{u} \in \Delta_N$, and let $\mathsf{p}_t^{A_t}$ be the distribution output by FastSleepTransduce at round t. For any distribution p_t^*, $t \in [T]$, the following inequalities hold:

$$\begin{aligned}
\mathsf{u}(A_t) \mathop{\mathbb{E}}_{x_t\sim\mathsf{p}_t^{A_t}}[l_t(x_t)]1_{\tau_t<N} &= \mathsf{u}(A_t)\left(\mathop{\mathbb{E}}_{x_t\sim\mathsf{p}_t^{A_t,*}}[l_t(x_t)] + \mathop{\mathbb{E}}_{x_t\sim\mathsf{p}_t^{A_t}}[l_t(x_t)] - \mathop{\mathbb{E}}_{x_t\sim\mathsf{p}_t^{A_t,*}}[l_t(x_t)]\right)1_{\tau_t<N} \\
&\le \mathsf{u}(A_t)\left(\mathop{\mathbb{E}}_{x_t\sim\mathsf{p}_t^{A_t,*}}[l_t(x_t)] + \|\mathsf{p}_t^{A_t} - \mathsf{p}_t^{A_t,*}\|_1\|l_t\|_\infty\right)1_{\tau_t<N} \\
&\le \mathsf{u}(A_t)\left(\mathop{\mathbb{E}}_{x_t\sim\mathsf{p}_t^{A_t,*}}[l_t(x_t)] + \|\mathsf{p}_t^{A_t} - \mathsf{p}_t^{A_t,*}\|_1\right)1_{\tau_t<N}.
\end{aligned}$$

Let u_t be the state that the algorithm is in at time t as a result of its past actions. Consider the matrix $\mathbf{Q}^{t,u_t}$ defined in the algorithm. The restriction of $\mathbf{Q}^{t,u_t}$ to its non-zero rows and columns is a row stochastic matrix. Let $\mathsf{p}_t^{A_t,*}$ be its stationary distribution, and by augmenting it with zeros in the zero rows of $\mathbf{Q}^{t,u_t}$, we may take $\mathsf{p}_t^{A_t,*} \in \Delta_N$ as a fixed point of $\mathbf{Q}^{t,u_t}$. Then, we can write:

$$\begin{aligned}
&\sum_{t=1}^T \mathsf{u}(A_t) \mathop{\mathbb{E}}_{x_t\sim\mathsf{p}_t^{A_t,*}}[l_t(x_t)]1_{\tau_t<N} \\
&= \sum_{t=1}^T\sum_{i=1}^N\sum_{j=1}^N \mathsf{u}(A_t)\mathsf{p}_{t,i}^{A_t,*}\mathbf{Q}_{i,j}^{t,u_t} l_{t,j}1_{\tau_t<N} \\
&= \sum_{i=1}^N\sum_{t=1}^T\sum_{j=1}^N \mathsf{u}(A_t)\mathbf{Q}_{i,j}^{t,u_t}\mathsf{p}_{t,i}^{A_t} l_{t,j}1_{\tau_t<N} + \sum_{i=1}^N\sum_{t=1}^T\sum_{j=1}^N \mathsf{u}(A_t)\mathbf{Q}_{i,j}^{t,u_t}(\mathsf{p}_{t,i}^{A_t,*} - \mathsf{p}_{t,i}^{A_t})l_{t,j}1_{\tau_t<N} \\
&\le \sum_{i=1}^N\sum_{t=1}^T\sum_{j=1}^N \mathsf{u}(A_t)\mathbf{Q}_{i,j}^{t,u_t}\mathsf{p}_{t,i}^{A_t} l_{t,j}1_{\tau_t<N} + \sum_{t=1}^T \mathsf{u}(A_t)\|\mathsf{p}_t^{A_t,*} - \mathsf{p}_t^{A_t}\|_1 1_{\tau_t<N}.
\end{aligned}$$

On the other hand, by design, if $\tau_t \ge N$, then $\mathsf{p}_t = \mathsf{p}_t^*$, so that

$$\sum_{t=1}^T \mathsf{u}(A_t) \mathop{\mathbb{E}}_{x_t\sim\mathsf{p}_t^{A_t}}[l_t(x_t)]1_{\tau_t\ge N} \le \sum_{t=1}^T\sum_{i=1}^N\sum_{t=1}^T\sum_{j=1}^N \mathsf{u}(A_t)\mathbf{Q}_{i,j}^{t,u_t}\mathsf{p}_{t,i}^{A_t} l_{t,j}1_{\tau_t\ge N}.$$

Thus, it follows that for any WFST $\mathcal{T} \in \mathcal{T}$,

$$\begin{aligned}
&\sum_{t=1}^T \mathsf{u}(A_t) \mathop{\mathbb{E}}_{x_t\sim\mathsf{p}_t^{A_t}}[l_t(x_t)] \\
&\le \sum_{i=1}^N\sum_{t=1}^T\sum_{j=1}^N \mathsf{u}(A_t)\mathbf{Q}_{i,j}^{t,u_t}\mathsf{p}_{t,i}^{A_t} l_{t,j} + 2\sum_{t=1}^T \mathsf{u}(A_t)\|\mathsf{p}_t^{A_t,*} - \mathsf{p}_t^{A_t}\|_1 1_{\tau_t<N}
\end{aligned}$$

$$
\begin{aligned}
&= \sum_{i=1}^{N}\sum_{t=1}^{T}\sum_{j=1}^{N}\sum_{u\in Q_{\mathcal{T}}} \mathsf{u}(A_t)\mathbf{Q}_{i,j}^{t,u} 1_{\delta_{\mathcal{T}}(I_{\mathcal{T}},x_{1:t-1})=u}\mathsf{p}_{t,i}^{A_t} l_{t,j} + 2\sum_{t=1}^{T}\mathsf{u}(A_t)\|\mathsf{p}_t^{A_t,*}-\mathsf{p}_t^{A_t}\|_1 1_{\tau_t<N} \\
&= \sum_{u\in Q_{\mathcal{T}}}\sum_{i\in \mathsf{ilab}[\mathsf{E}_{\mathcal{T}}[u]]}\sum_{t=1}^{T}\sum_{j=1}^{N}\mathsf{u}(A_t)\mathbf{Q}_{i,j}^{t,u} 1_{\delta_{\mathcal{T}}(I_{\mathcal{T}},x_{1:t-1})=u}\mathsf{p}_{t,i}^{A_t} l_{t,j} \\
&\quad + 2\sum_{t=1}^{T}\mathsf{u}(A_t)\|\mathsf{p}_t^{A_t,*}-\mathsf{p}_t^{A_t}\|_1 1_{\tau_t<N} \\
&\le \sum_{u\in Q_{\mathcal{T}}}\sum_{i\in \mathsf{ilab}[\mathsf{E}_{\mathcal{T}}[u]]}\min_{\substack{\mathsf{u}^{u,i}\in\Delta_N \\ \sum_{j\in A_t}\mathsf{u}_j^{q,i}=\mathsf{u}(A_t)}}\sum_{t=1}^{T}\sum_{j=1}^{N} 1_{\delta_{\mathcal{T}}(I_{\mathcal{T}},x_{1:t-1})=u}\mathsf{u}_j^{q,i} 1_{j\in A_t}\mathsf{p}_{t,i}^{A_t} l_{t,j} \\
&\quad + 2\sum_{t=1}^{T}\mathsf{u}(A_t)\|\mathsf{p}_t^{A_t,*}-\mathsf{p}_t^{A_t}\|_1 1_{\tau_t<N} + \sum_{u\in Q_{\mathcal{T}}}\sum_{i\in \mathsf{ilab}[\mathsf{E}_{\mathcal{T}}[u]]}\mathrm{Reg}_T(\mathcal{A}_{u,i},\Phi_{\text{sleep}}) \\
&\le \sum_{u\in Q_{\mathcal{T}}}\sum_{i\in \mathsf{ilab}[\mathsf{E}_{\mathcal{T}}[u]]}\sum_{e\in \mathsf{E}_{\mathcal{T}}[q]}\sum_{t=1}^{T}\sum_{j=1}^{N} 1_{\delta_{\mathcal{T}}(I_{\mathcal{T}},x_{1:t-1})=u}\mathsf{u}_j 1_{j\in A_t} w[e]\mathsf{p}_{t,i}^{A_t} l_{t,j} \\
&\quad + 2\sum_{t=1}^{T}\mathsf{u}(A_t)\|\mathsf{p}_t^{A_t,*}-\mathsf{p}_t^{A_t}\|_1 1_{\tau_t<N} + \sum_{u\in Q_{\mathcal{T}}}\sum_{i\in \mathsf{ilab}[\mathsf{E}_{\mathcal{T}}[q]]}\mathrm{Reg}_T(\mathcal{A}_{u,i},\Phi_{\text{sleep}}) \\
&= \sum_{t=1}^{T}\mathop{\mathbb{E}}_{x_t\sim\mathsf{p}_t}\left[\sum_{e\in \mathsf{E}_{\mathcal{T}}[\delta_{\mathcal{T}}(I_{\mathcal{T}},x_{1:t-1}),x_t]}(\mathsf{u}|_{A_t})_{\mathsf{olab}[e]} w[e]\mathsf{p}_{t,i}^{A_t} l_t(\mathsf{olab}[e])\right] \\
&\quad + 2\sum_{t=1}^{T}\mathsf{u}(A_t)\|\mathsf{p}_t^{A_t,*}-\mathsf{p}_t^{A_t}\|_1 1_{\tau_t<N} + \sum_{u\in Q_{\mathcal{T}}}\sum_{i\in \mathsf{ilab}[\mathsf{E}_{\mathcal{T}}[q]]}\mathrm{Reg}_T(\mathcal{A}_{u,i},\Phi_{\text{sleep}}).
\end{aligned}
$$

For any distribution $\mathsf{u}^*\in\Delta_N$ and awake sequence A_1^T, Let $L_T^{\mathsf{u},A_1^T} = \sum_{t=1}^{T}\mathsf{u}^*(A_t)\,\mathbb{E}_{x_t\sim\mathsf{p}_t}[l_t(x_t)]$, Thus, algorithm $\mathcal{A}_{u,i}$ achieves a regret in $O(\sqrt{L_T^{\mathsf{u}_i^{q,*},A_1^T}\log(N)})$, where $\mathsf{u}_i^{q,*}$ is a maximizer of algorithm $\mathcal{A}_{u,i}$'s sleeping regret.

Since the losses attributed to algorithm $\mathcal{A}_{u,i}$ are scaled by $1_{\delta_{\mathcal{T}}(I_{\mathcal{T}},x_{1:t-1})=u}\mathsf{p}_{t,i}^{A_t}$, it follows that at each round, the sum of the losses over all the algorithms is at most 1. Thus, by Jensen's inequality, it follows that

$$
\begin{aligned}
&\frac{1}{\sum_{u\in Q_{\mathcal{T}}}|\mathsf{ilab}[\mathsf{E}_{\mathcal{T}}[u]]|}\sum_{u\in Q_{\mathcal{T}}}\sum_{i\in \mathsf{ilab}[\mathsf{E}_{\mathcal{T}}[u]]}\mathrm{Reg}_T(\mathcal{A}_{u,i},\Phi_{\text{sleep}}) \\
&= \frac{1}{\sum_{u\in Q_{\mathcal{T}}}|\mathsf{ilab}[\mathsf{E}_{\mathcal{T}}[u]]|}\sum_{u\in Q_{\mathcal{T}}}\sum_{i\in \mathsf{ilab}[\mathsf{E}_{\mathcal{T}}[u]]}\sqrt{L_T^{\mathsf{u}_i^{q,*},A_1^T}(\mathcal{A}_{u,i})\log(N)} \\
&\le \sqrt{\frac{1}{\sum_{u\in Q_{\mathcal{T}}}|\mathsf{ilab}[\mathsf{E}_{\mathcal{T}}[u]]|}\sum_{u\in Q_{\mathcal{T}}}\sum_{i\in \mathsf{ilab}[\mathsf{E}_{\mathcal{T}}[u]]}L_T^{\mathsf{u},A_1^T}(\mathcal{A}_{u,i})\log(N)} \\
&\le \sqrt{\frac{1}{\sum_{u\in Q_{\mathcal{T}}}|\mathsf{ilab}[\mathsf{E}_{\mathcal{T}}[u]]|}\sum_{t=1}^{T}\mathsf{u}(A_t)\log(N)},
\end{aligned}
$$

so that $\sum_{u\in Q_{\mathcal{T}}}\sum_{i\in \mathsf{ilab}[\mathsf{E}_{\mathcal{T}}[u]]}\mathrm{Reg}_T(\mathcal{A}_{u,i},\Phi_{\text{sleep}}) \le \sqrt{\sum_{t=1}^{T}\mathsf{u}(A_t)\sum_{u\in Q_{\mathcal{T}}}\sum_{i\in \mathsf{ilab}[\mathsf{E}_{\mathcal{T}}[u]]}\log(N)}$.

Finally, during the rounds in which $1_{\tau_t<N}$, p_t is an RPM approximation of p_t^* using τ_t iterations. Thus, by Equation 3.7 in [Nesterov and Nemirovski, 2015] the following inequality holds: $\|\mathsf{p}_t-\mathsf{p}_t^*\|_1\le(1-\alpha_t)^{\tau_t}$. Since τ_t is chosen so that the inequality $(1-\alpha_t)^{\tau_t}\le 1/\sqrt{t}$ holds, it follows that

$\sum_{t=1}^{T} \mathsf{u}(A_t)\|\mathsf{p}_t^{A_t} - \mathsf{p}_t^{A_t,*}\|_1 \leq \sqrt{T}$, which proves the regret bound

$$\sum_{t=1}^{T} \mathsf{u}(A_t) \mathop{\mathbb{E}}_{x_t \sim \mathsf{p}_t^{A_t}} [l_t(x_t)] - \sum_{t=1}^{T} \mathop{\mathbb{E}}_{x_t \sim \mathsf{p}_t^{A_t}} \left[\sum_{e \in \mathsf{E}_{\mathcal{T}}[\delta_{\mathcal{T}}(I_{\mathcal{T}}, x_{1:t-1}), x_t]} (\mathsf{u}|_{A_t})_{\mathsf{olab}[e]} w[e] l_t(\mathsf{olab}[e]) \right]$$
$$\leq O\left(\sqrt{\sum_{t=1}^{T} \mathsf{u}(A_t) \sum_{q \in Q_\Phi} \sum_{i \in \mathsf{ilab}[\mathsf{E}_{\mathcal{T}}[q]]} \log(N)} \right).$$

Furthermore, the computational cost of the t-th iteration of the algorithm is dominated by τ_t matrix multiplications or the solution of the linear system. τ_t can be bounded as follows: $\tau_t = \left\lceil \frac{\log\left(\frac{1}{\sqrt{t}}\right)}{\log(1-\alpha_t)} \right\rceil \leq \frac{\log\left(\frac{1}{\sqrt{t}}\right)}{\log(1-\alpha)} + 1$. Thus, the computational cost of the t-th iteration is in

$$O\left(N^2 \min\left\{ \frac{\log t}{\log(1/(1-\alpha_t))}, N \right\} \right) \leq O\left(N^2 \min\left\{ \frac{\log T}{\log(1/(1-\alpha))}, N \right\} \right).$$

□

H Connections with game-theoretic equilibria

There is an elegant connection between regret minimization in online learning and convergence to game-theoretic equilibria in repeated games [Nisan et al., 2007]. As an example, remarkably, if all players in a repeated game follow a swap regret minimization algorithm, then the empirical distribution of their play converges to a correlated equilibrium (see for example [Blum and Mansour, 2007]). Similarly, if all players follow a conditional swap regret minimization algorithm, then the empirical distribution of their play converges to a conditional correlated equilibrium [Mohri and Yang, 2014]. Hazan and Kale [2008] showed a result generalizing this property to the case of a Φ-regret and Φ-equilibrium. Moreover, the authors showed that the existence of an efficient Φ-regret minimizing algorithm is equivalent to the possibility of efficiently computing a fixed point associated to Φ-regret. However, their characterization of efficiency is a per iteration time complexity of $O(|\Phi|)$, which may be very large, in fact exponential in the number of experts, as in the case of the examples discussed in this paper. Here, we proved the existence of a large class of Φ-equilibria, *transductive equilibria*, i.e. those induced by a WFST, that are realizable in time that is polynomial in the number of experts.

I Lower bound

Auer [2017] proved a lower bound of $\Omega(\sqrt{TN})$ for swap regret. Since swap regret is a special case of transductive regret, that lower bound applies to the setting of transductive regret as well. This is further detailed in an extended version of this paper.

J Bandit setting

Blum and Mansour [2007] and Mohri and Yang [2014] respectively showed that swap and conditional swap regret-minimizing algorithms can be extended to the bandit setting. Similarly, our more general transductive regret-minimizing can be extended to the bandit setting, as shown and detailed in the extended version of this paper.